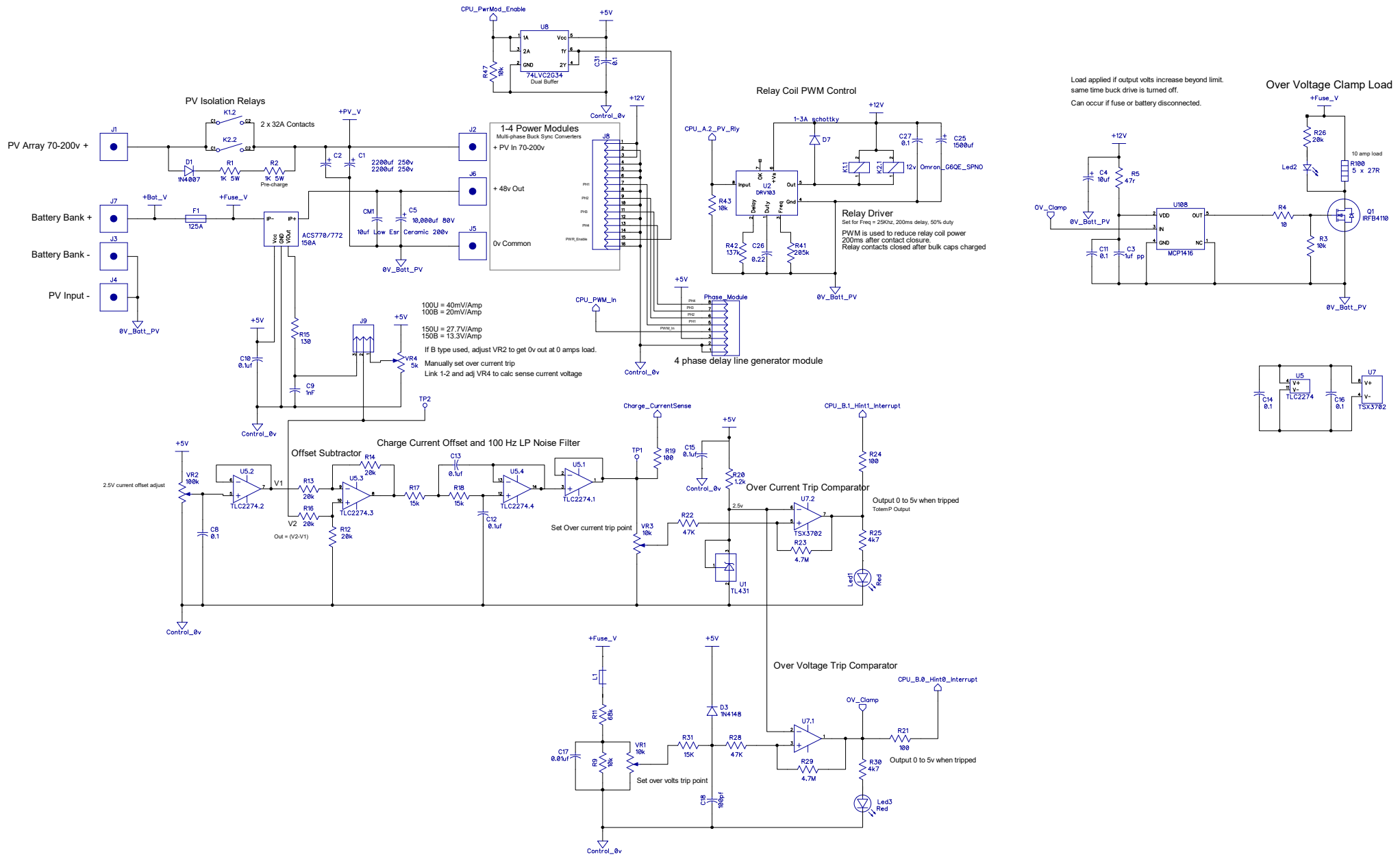
PV Isolation Relays
2 x 32A Contacts
PV Array 70-200v +
Battery Bank +
Battery Bank -
PV Input -
1-4 Power Modules
Multi-phase Buck Sync Converters
+ PV In 70-200v
+ 48v Out
0v Common
Relay Coil PWM Control
Relay Driver
Set for Freq = 25Khz, 200ms delay, 50% duty
PWM is used to reduce relay coil power
200ms after contact closure.
Relay contacts closed after bulk caps charged
100U = 40mV/Amp
100B = 20mV/Amp
150U = 27.7V/Amp
150B = 13.3V/Amp
If B type used, adjust VR2 to get 0v out at 0 amps load.
Manually set over current trip
Link 1-2 and adj VR4 to calc sense current voltage
4 phase delay line generator module
Charge Current Offset and 100 Hz LP Noise Filter
Offset Subtractor
2.5V current offset adjust
Out = (V2-V1)
Set Over current trip point
Over Current Trip Comparator
Output 0 to 5v when tripped
TotemP Output
Over Voltage Trip Comparator
Set over volts trip point
Output 0 to 5v when tripped
Load applied if output volts increase beyond limit.
same time buck drive is turned off.
Can occur if fuse or battery disconnected.
Over Voltage Clamp Load
10 amp load